Perceptual Image Quality Assessment Metrics

Martin Čadík

Czech Technical University in Prague, Czech Republic

Computer Graphics Group

department of computer science and engineering

Content

- Why to concern human perception in computer graphics?
- Important characteristics of the HVS
- Error sensitivity approach, VDP
- Structure similarity approach, SSIM
- Our Experiments

Motivation

- Jack Tumblin, James A. Ferwerda:

  “The goal of computer graphics is not to control light, but to control our perception of light. Light is merely a carrier of the information we gather by perception.”

- Effective visualization of information
- Quality improvement
- Saving of resources

Human Visual System

- Physical structure well established

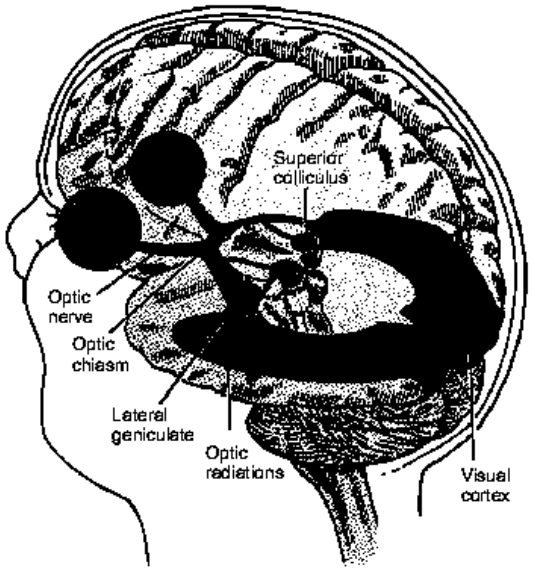

Visual masking

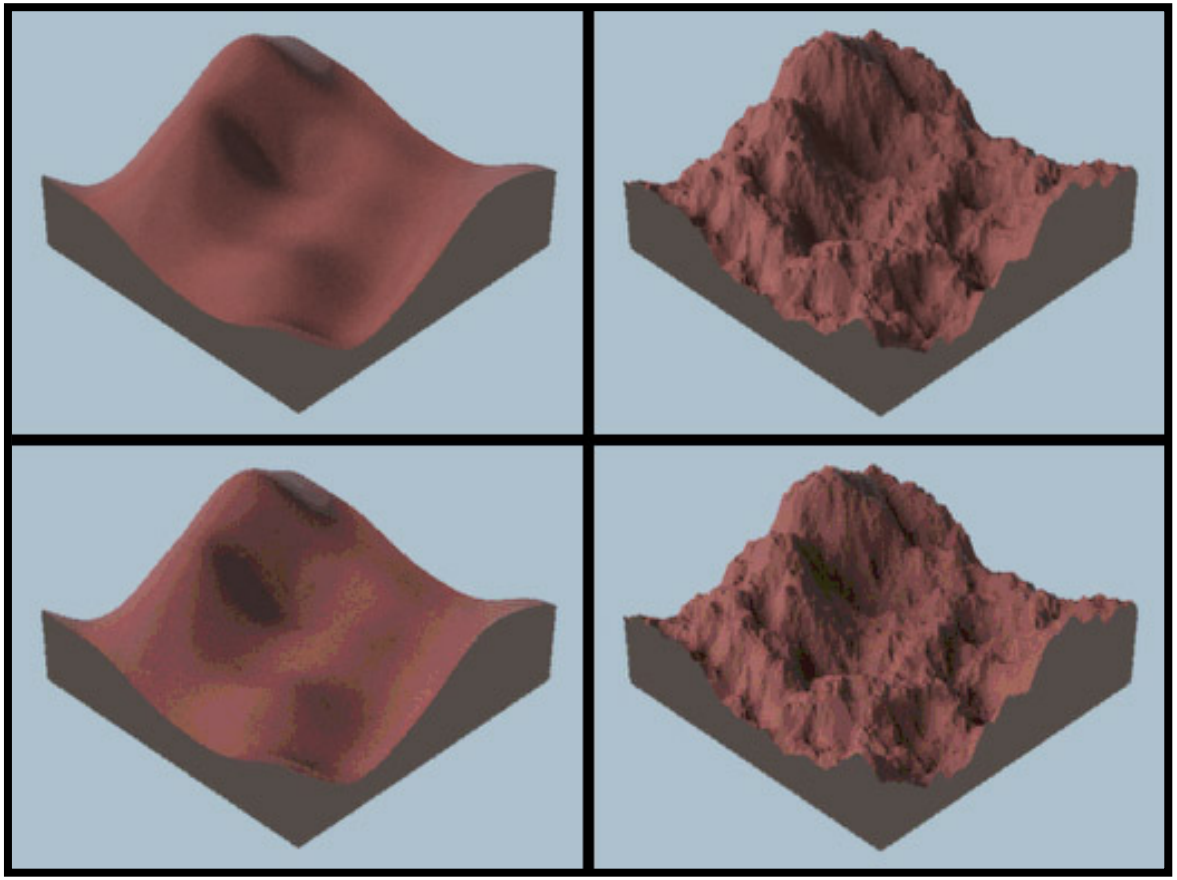

Human Visual System (cont.)

- CSF
  - specifies the detection threshold as a function of the spatial frequency

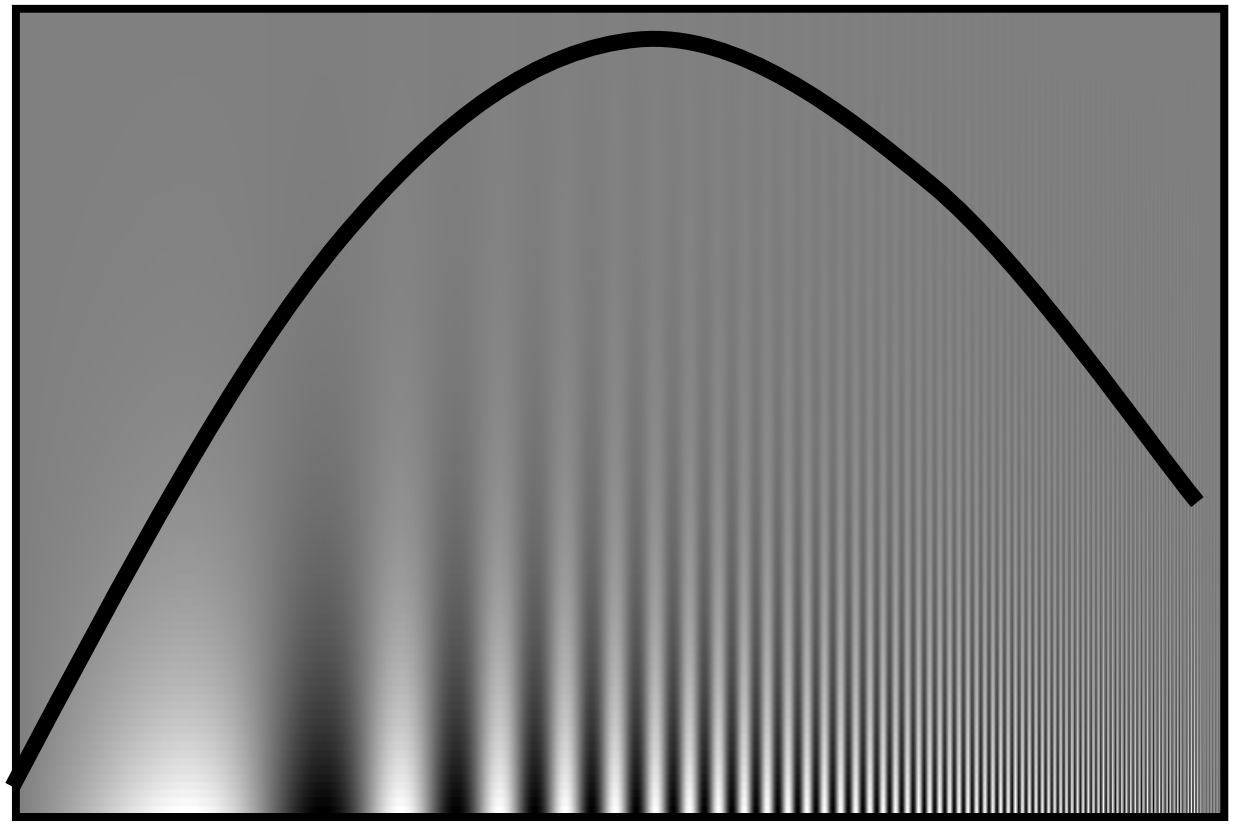

Perceptual Image Quality Assessment

- RMSE is NOT sufficient

VDP(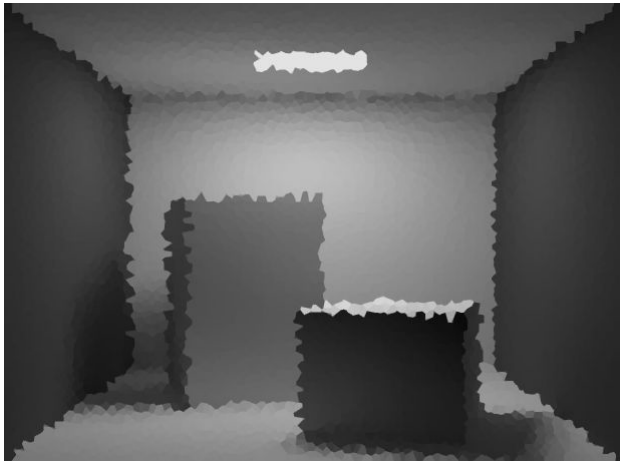 , 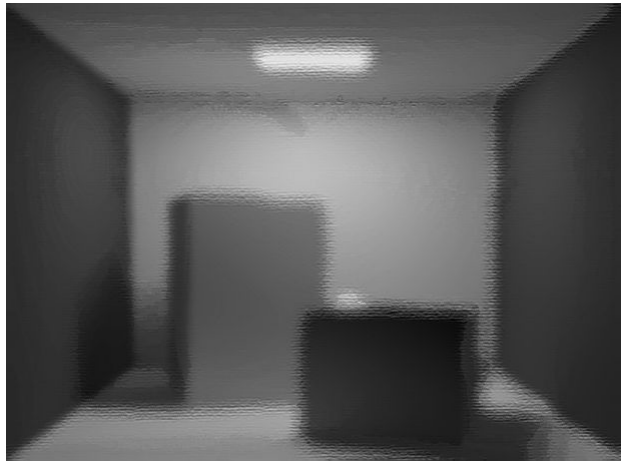)=

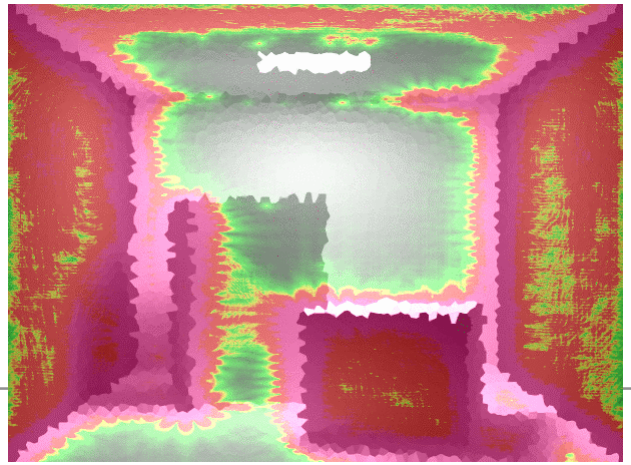

(6)

Error Sensitivity Based Approach

- General framework

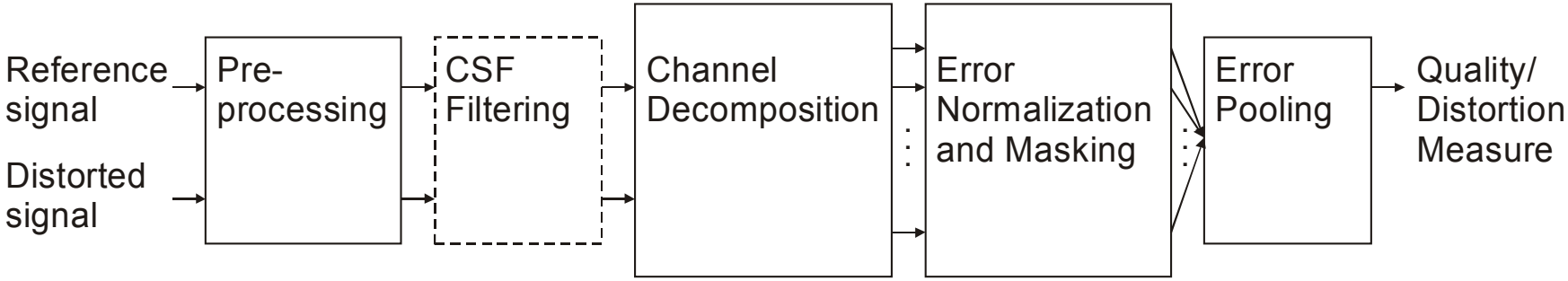

- Visible Differences Predictor [Daly93]
- Perceptual Distortion Measure [Teo, Heeger 94]
- Visual Discrimination Model [Lubin 95]
- Gabor pyramid model [Taylor et al. 97]
- WVDP [Bradley 99]

Visible Differences Predictor

- [Daly 93]

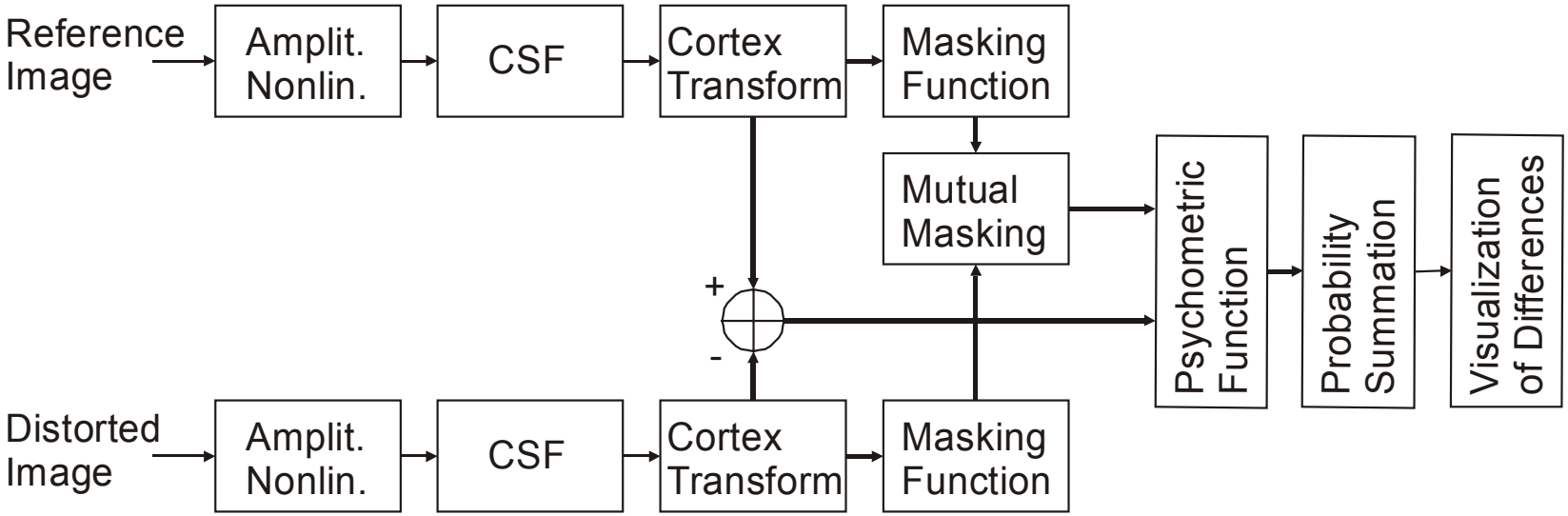

- Threshold sensitivity
- Visual Masking

Structural Similarity Based Approach

- Main function of the HVS:
  to extract structural information

- UQI [Wang 02]
- SSIM [Wang 04]
- Multidimensional Quality Measure Using SVD [Shnayderman 04]

Structural SIMilarity Index

- [Wang 04]

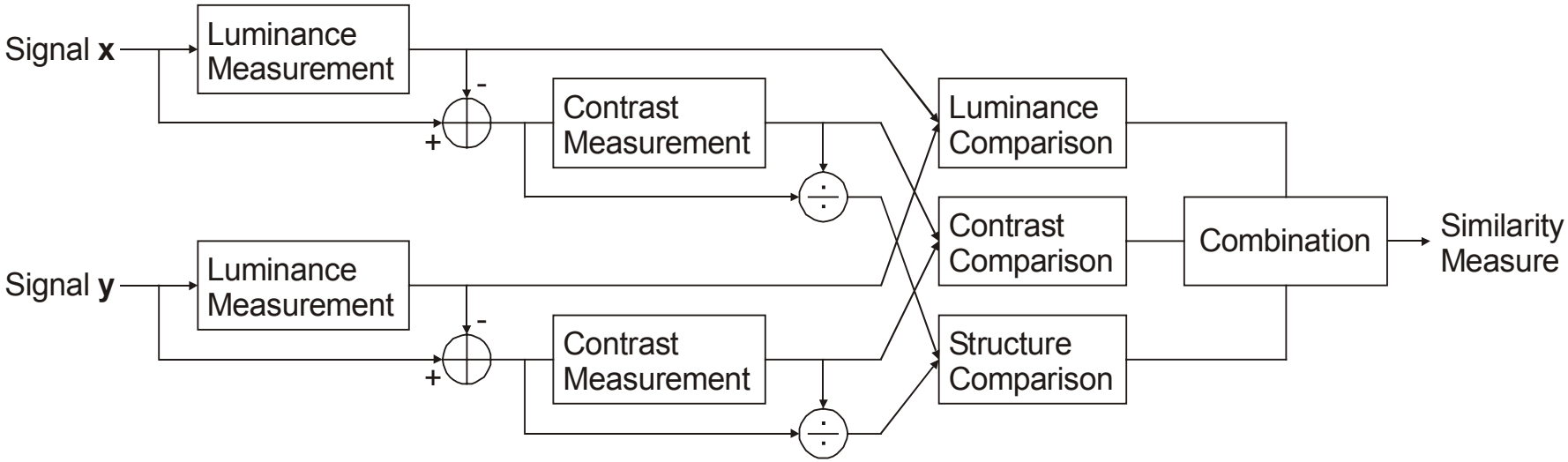

- Simple implementation
- Fast computation

Traditional vs. Structural Approach

- Representatives from each group
  - VDP
  - SSIM
- Independent subjective tests
  - 33 subjects
  - uniformly compressed images
  - ROI compressed images
- Results
  - SSIM usually better
  - SSIM faster to compute and easier to implement
  - bad performance of both models in ROI tasks

Traditional vs. Structural Approach (cont.)

Original (left) and ROI compressed (right) input images

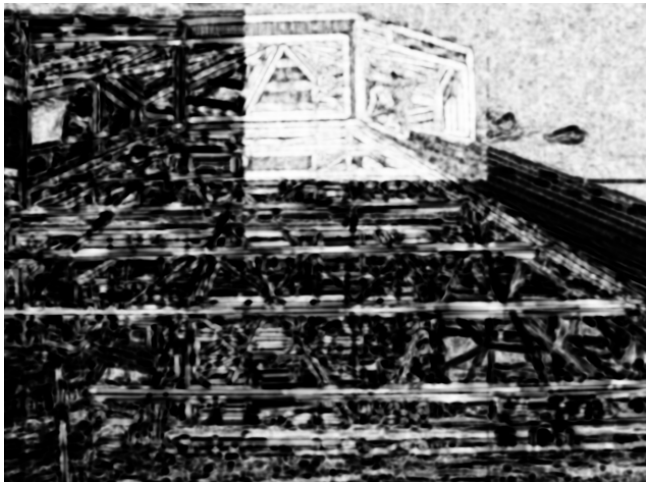

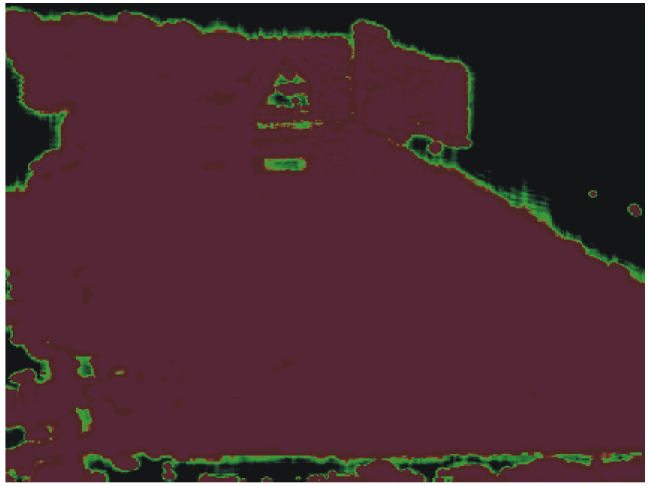

SSIM probability map (left) and

VDP probability map (right)

Comparing Non-Photorealistic Images

- NPR images sometimes better to visualize information i.e. architectural sketches [Schumann et al. 96]
- VDP model
- Input images
  - ray-traced
  - diffuse radiosity
  - real photos
- Various image-based operators tested
- Results
  - absolute values of differences inherently high
  - some groups of techniques identified from correlations
  - **HOWEVER:** VDP just a first stage
  - ‘semantics’ must be considered
  - FDP’s => Functional differences predictors [Ferwerda 03]

Thank You for Your Attention

- QUESTIONS?
- cadikm@fel.cvut.cz